# PanaFlow gas meter system

## Panametrics ultrasonic flow meters for gas

The PanaFlow gas meter system is a complete ultrasonic flow meter offering for gas applications with a unique combination of accuracy, rangeability, and reliability in a robust meter design.

The PanaFlow gas meter system consists of two models—the one-path PanaFlow Z1G and the two-path PanaFlow Z2G. Both meters offer a high-performance, yet affordable solution for a variety of gas flow applications.

### Applications

PanaFlow gas flow meters can be used in applications such as:

- Biogas
- Natural gas production
- Vent gas
- Waste gas
- Shale gas
- Coal-seam gas wellhead
- Vapor recovery
- Fuel gas

### Features and benefits

| | |
|---|---|
| **No drifting, no periodic calibration required** | No loss of process control, no downtime, no expense from calibration, and optimization of assets |
| **No pressure drop** | No wasted energy from running a pump or need to purchase a larger size pump |
| **No restriction in the pipe** | Contamination will not affect meter's measurement (drifting) or cause any damage to meter |
| **No filters or strainers** | No maintenance cost |
| **Bi-directional measurement** | No additional meters required |
| **No moving parts** | No loss of process control, no downtime, no expense from calibration, and optimization of assets |
| **Explosion-proof transducer design** | More power to transducers at higher voltages, less risk of attenuation in fluid |
| **Full ultrasonic product line** | Meets more needs with full product portfolio; one manufacturer for ultrasonic flow meters |

Panametrics
a Baker Hughes business

## Reliable flow measurement that is easy on your budget

The PanaFlow gas portfolio represents a new generation of Panametrics ultrasonic flow meters. Offered in one-path or two-path wetted versions, PanaFlow gas meters bring together Panametrics ultrasonic expertise with the benefits of ultrasonic technology for affordable, high performance flow measurement.

Unlike other flow measurement technologies, the PanaFlow meters do not require maintenance since they do not have any obstruction in the flow path to clog the process line or moving parts to be damaged by flowing gas. They provide years of trouble-free operation with no adjustments, tuning or corrections. PanaFlow gas meters provide a lower overall total cost of ownership, superb reliability, and excellent performance.

## Designed for high impurity gas measurements

Each PanaFlow gas meter is a complete ultrasonic flow metering system specifically designed for the measurement of gases with high levels of impurities. Engineered to the highest levels of reliability and dependability, it is designed with an all-cast meter body and high-accuracy machined surfaces. It has no welds to adversely impact flow dynamics, making possible high accuracy flow measurements, even at low flow conditions.

## Local or remote electronics

PanaFlow gas meters are offered with local or remote electronics that are factory-installed on the meter body or electronics that can be installed remotely from the meter body.  It is not recommended to locally mount the electronics in applications above 185°F (85°C). PanaFlow gas meters have robust electronics functionality to meet your application needs.

Electronics ordered with a PanaFlow gas meter system are programmed with setup information based on your application, so the system is ready to use as soon as the meter body is installed. When local electronics are integrated with the system, the transducer wiring is already complete, further simplifying the field installation. When remote electronics are used, transducer cabling must be run between the flow meter system and the flow meter electronics.

## Transit-time flow measurement

In this method, two transducers serve as both ultrasonic signal generators and receivers. They are in acoustic communication with each other, meaning the second transducer can receive ultrasonic signals transmitted by the first transducer and vice versa. In operation, each transducer functions as a transmitter, generating a certain number of acoustic pulses, and then as a receiver for an identical number of pulses. The time interval between transmission and reception of the ultrasonic signals is measured in both directions. When the gas in the pipe is not flowing, the transit-time downstream equals the transit-time upstream. However, when the gas is flowing, the transit-time downstream is less than the transit-time upstream. The difference between the downstream and upstream transit times is proportional to the velocity of the flowing gas, and its sign indicates the direction of flow.

Transit time flow measurement

## Proven technology with improved sound isolation

A PanaFlow gas meter system employs similar robust and reliable transducer technology used in thousands of Panametrics flare gas applications around the world. Ultra-high power transducers with enhanced sound isolation are designed for conditions of extreme condensate and impurities, and for continuous operation even under the harshest of process conditions. The unique design ensures the highest field reliability for continuous flow measurements over a wide range of conditions.

High powered T19 transducers

## Fast and easy installation

An integrated PanaFlow gas meter system is fast and easy to install as all components are already installed in the meter body. The system is factory assembled and tested so it meets strict quality control standards. A PanaFlow meter body is composed of a length of pipe with flanged ends and transducer ports rated to the application's pressure requirements, so all the user needs to do is bolt the end flanges into place in the process pipeline.

## Performance specifications

| Model | Z1G | Z2G |
|---|---|---|
| Number of paths | One Path | Two Path |
| | Flow measurement range (+/-) | |
| 2" (50mm) | 0.5 to 200 ft/s (0.15 to 60 m/s) | 0.5 to 200 ft/s (0.15 to 60 m/s) |
| 3" (80mm) | 0.5 to 200 ft/s (0.15 to 60 m/s) | 0.5 to 200 ft/s (0.15 to 60 m/s) |
| 4" (100mm) | 0.5 to 200 ft/s (0.15 to 60 m/s) | 0.5 to 200 ft/s (0.15 to 60 m/s) |
| 6" (150mm) | 0.5 to 200 ft/s (0.15 to 60 m/s) | 0.5 to 200 ft/s (0.15 to 60 m/s) |
| 8" (200mm) | 0.5 to 200 ft/s (0.15 to 60 m/s) | 0.5 to 200 ft/s (0.15 to 60 m/s) |
| 10" (250mm) | 0.5 to 170 ft/s (0.15 to 51 m/s) | 0.5 to 180 ft/s (0.15 to 54 m/s) |
| 12" (300 mm) | 0.5 to 130 ft/s (0.15 to 39 m/s) | 0.5 to 150 ft/s (0.15 to 45 m/s) |
| 14" (350mm) | 0.5 to 100 ft/s (0.15 to 30 m/s) | 0.5 to 130 ft/s (0.15 to 39 m/s) |
| 16" (400mm) | 0.5 to 80 ft/s (0.15 to 24 m/s) | 0.5 to 100 ft/s (0.15 to 30 m/s) |
| | Meter accuracy and sensitivity - see accuracy notes below | |
| | Flow velocity accuracy from 5 ft/s (1.5 m/s) to Qmax - note 1 | |
| 2" (50mm) to 16" (400mm) | +-1.5% | +-1% |
| | Flow velocity sensitivity from 0.5 ft/s to 5 ft/s (0.15 to 1.5 m/s) – note 1 | |
| 2" (50mm) to 16" (400mm) | +/- 0.075 ft/s (+/- 0.02 m/s) | +/- 0.05 ft/s (+/- 0.015 m/s) |
| | Repeatability – notes 1 and 2 | |
| 2" (50mm) to 16" (400mm) | 0.5% of reading | |
| | Percent methane - note 2 | |
| 2" (50mm) to 16" (400mm) | 2% | |

Note 1:

Accuracy/repeatability specifications assume a final installation with fully developed flow profile (typically 20 diameters upstream and 10 diameters downstream of straight pipe run), Reynolds Number > 5000 and single phase fluids. Applications with piping arrangements that induce swirl (e.g., two out-of-plane elbows) may require additional straight run and/or flow conditioning. For shorter straight pipe runs, consult the factory for a computational flow dynamic evaluation.

Note 2:

Percent methane in carbon dioxide is only available with percent methane in carbon dioxide software for biogas.

# Operation and performance

## Fluid types

Acoustically conductive gases

## Flow measurement

Correlation transit-time

## Meter body materials

Low temperature carbon steel, SA352 Gr. LCC Stainless steel, SA351 Gr. CF8M Duplex stainless steel, SA995 Gr. CD3MWCuN

## Flange ratings

ASME: 150 lb, 300 lb or 600 lb
DIN: PN10, PN16, PN25; PN40 or PN63

## Meter body certifications

PED Cat III, Module B+C2
CRN (All Canadian Provinces)
NACE MR01-75/MR-01-03

## Calibration

All meters are air calibrated and supplied with a calibration certificate

## Measurement parameters

Mass flow, standard and actual flow, totalized flow, and flow velocity

% methane (with percent methane in carbon dioxide software for biogas)

## Enclosure

NEMA Type 4X explosion-proof and weatherproof (IP66)

- Standard: Epoxy-coated copper-free aluminum
- Optional: Stainless steel

## Electronics mounting

Local or remote mounting

## Hazardous area certification

US/CAN:
Class I, Division 1, Groups B, C, D; T6…T3C NEMA 4X, IP66, single seal
Class I, Zone 1, AEx db IIB+H2 T6…T3C Gb NEMA 4X, IP66, single seal

ATEX:
II 2 G Ex db IIB+H2 T6…T3 Gb IP66

IECEx:
Ex db IIB+H2 T6…T3 Gb IP66
Other hazardous area certifications are available upon request.

## Input power

- Standard: 100 to 240 VAC
- Optional: 12 to 28 VDC, ±5%

## Cable entries

3/4" NPT

M20 adapters

## Display languages

English

## Display

Optional: 2 line x 16 character backlit LCD display, configurable to display up to four measurement parameters in sequence

## Keypad

Built-in infrared, six-button keypad for full functionality operation

## Power consumption

20 W maximum

## Process temperature range

-40 to 185 °F (−40 to 85°C) local mount

-40 to 302 °F (−40 to 150°C) remote mount

## Ambient temperature range

-40 to 140 °F (−40 to 60°C)

## Storage temperature

-40 to +185 °F (-40 to +85°C)

## Pressure range

Up to maximum allowable flange operating pressure at temperature per ASME B16.5 or EN1092-1

## Inputs/outputs

Standard:

- Two 4-20 mA isolated outputs: 600 Ω maximum load
- Two 4-20 mA inputs: pressure and temperature

Optional:

- Two pulse or frequency outputs: optically isolated, 3 A maximum, 100 VDC maximum, 1 W maximum, from DC to 10 kHz maximum
- Two alarm relays: 120 VAC, 28 VDC maximum, 5 A maximum, DC 30 W maximum, AC 60 VA maximum

## Digital communication

- Standard: RS485
- Optional: HART®
- Optional: Modbus®
- Optional: Foundation Fieldbus®

# Weight and dimensions

| Example dimensions - 3" (80 mm) flowcell (see below) | | | | | | | | | | |
|---|---|---|---|---|---|---|---|---|---|---|
| Flange range | A | C | D | X | Y | Z | CX | CY | CZ | Approx. weight |
| ASME 150# RF | 12.7 (322) | 19.0 (481) | 7.5 (190) | 20.0 (508) | 22.7 (576) | 9.8 (247) | 44.0 (1117) | 34.7 (881) | 33.8 (857) | 66.7 kg |
| ASME 300# RF | 12.7 (322) | 19.0 (481) | 8.3 (209) | 20.0 (508) | 23.1 (586) | 9.8 (247) | 44.0 (1117) | 35.1 (890) | 33.8 (857) | 70.7 kg |
| ASME 600# RF | 12.7 (322) | 19.0 (481) | 19.0 (209) | 20.0 (508) | 23.1 (586) | 9.8 (247) | 44.0 (1117) | 35.1 (890) | 33.8 (857) | 72.9 kg |

Refer to the table below for weights and dimensions for all line sizes.

| Reference drawings | |
|---|---|
| Drawing number | Drawing description |
| 712-2158 | General arrangement drawing, PanaFlow ZXG, Local Mount |
| 712-2160 | General arrangement drawing, PanaFlow ZXG, Remote Mount |

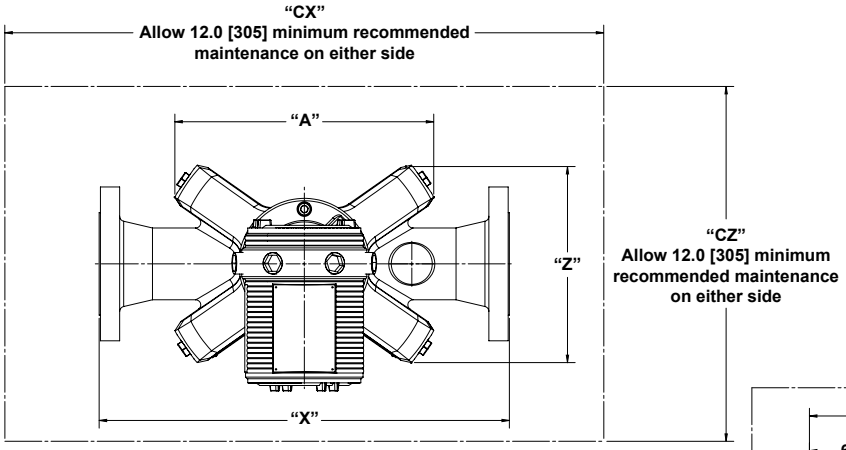


**Notes:** A 3"-2 Path flowcell is shown as an example. See the drawings listed above for details on other sizes.

All dimensions are inches [mm]

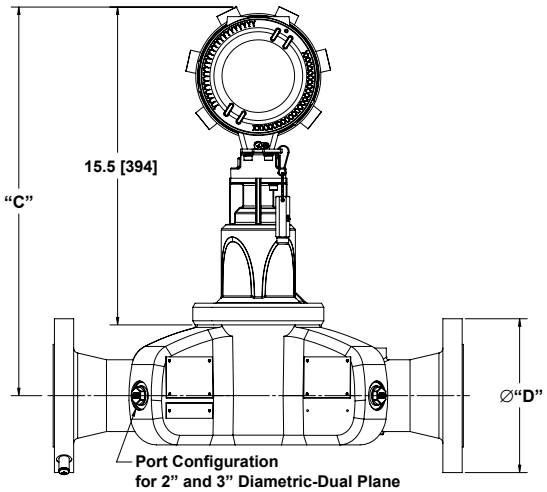


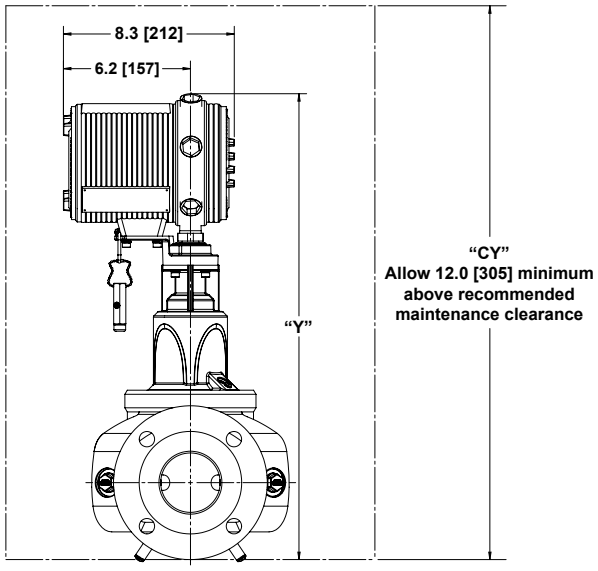

# PanaFlow ZxG part number

| AAAA | BBB | CC | D | EE | FFF | G | H | I | J | KKKK | LL | M | N | O | P | Q | R | S | T | U | Z |
|---|---|---|---|---|---|---|---|---|---|---|---|---|---|---|---|---|---|---|---|---|---|

**A: Model**

- PF8M Panaflow gas ultrasonic flow meter system with XGM868i transmitter
- PF8F Panaflow gas ultrasonic flow meter system with XGF868i transmitter

**B: Path**

- Z1G Single path meter body
- Z2G Dual path meter body

**C: Meter body size**

- 02 2 in. (50 mm) meter body
- 03 3 in. (80 mm) meter body
- 04 4 in. (100 mm) meter body
- 06 6 in. (150 mm) meter body
- 08 8 in. (200 mm) meter body
- 10 10 in. (250 mm) meter body
- 12 12 in. (300 mm) meter body
- 14 14 in. (350 mm) meter body
- 16 16 in. (400 mm) meter body

**D: Process flange**

- 1 ASME 150# RF (WN)
- 2 ASME 300# RF (WN)
- 3 ASME 600# RF (WN)
- E EN 1092-1/PN 10 (WN/Type 11)
- F EN 1092-1/PN 16 (WN/Type 11)
- G EN 1092-1/PN 25 (WN/Type 11)
- H EN 1092-1/PN 40 (WN/Type 11)
- J EN 1092-1/PN 60 (WN/Type 11)

**E: Meter body material**

- CC Low temperature carbon steel (SA-352 GR. LCC)
- S6 316 Stainless steel (SA-351 GR. CF8M)
- SD Duplex stainless steel (SA-995 GR. CD3MWCuN)

**F: Meter body schedule**

- STD Schedule STD
- 040 Schedule 40
- 0XS Schedule XS
- 080 Schedule 80
- 10S Schedule 10S
- 40S Schedule 40S
- 80S Schedule 80S
- CUS Schedule per PN rating

**G: System rating**

- A ASME B31.3, NACE MR0175/MR0103
- C ASME B31.3, CRN, NACE MR0175/MR0103
- P PED, NACE MR0175/MR0103

**H: Painting**

- A No paint (SS and DSS meter body only)
- G Standard painting

**I: Documentation**

- 0 No NDE documentation
- 1 Standard NDE documentation
- 2 PMI and NDE documents, wetted parts only

**J: Transducer o-ring materials**

- V Viton o-rings (most applications)
- E EDPM o-ring
- M M MARKEZ (FFKM) o-ring

**K: Electronics mounting**

- 000L Local mounted electronics - process temp to 85°C
- 0R25 Remote mounted electronics with 25 ft remote cable - process temp to 150°C
- 0R50 Remote mounted electronics with 50 ft remote cable - process temp to 150°C
- R100 Remote mounted electronics with 100 ft remote cable - process temp to 150°c

**L: Electronics enclosure**

- AL Type 7/type 4X explosionproof and weatherproof (IP66) epoxy-coated copper-free aluminum enclosure
- SS Type 7/type 4X explosionproof and weatherproof (IP66) 316 SS enclosure

**M: Cable entries**

- 1 Standard 3/4" NPT (female)
- 2 M20 (female)

**N: Power supply**

- 1 240 VAC input power
- 2 12-28 VDC input power

(continued on next page)

# PanaFlow gas meter system part number

| AAAA | BBB | CC | D | EE | FFF | G | H | I | J | KKKK | LL | M | N | O | P | Q | R | S | T | U | Z |
|---|---|---|---|---|---|---|---|---|---|---|---|---|---|---|---|---|---|---|---|---|---|
| PF8M | Z2G | 06 | 1 | CC | 040 | A | 1 | 0 | V | 0001 | AL | 1 | 1 | 0 | 3 | 0 | 102 | 00 | 1 | | 0 |

(Example part number string)

**O: Pressure and temperature**

- 0 PT sensor not included

**P: Inputs/outputs**

- 0 No additional inputs or outputs
- F 2 frequency outputs
- T 2 totalizer outputs
- A 2 standard alarms

**Q: Digital communication**

- 2 Modbus/RS485
- 3 Hart
- 4 Foundation Fieldbus

**R: Calibration**

- 102 Air calibration - 2in (50 mm)
- 103 Air calibration - 3in (80 mm)
- 104 Air calibration - 4in (100 mm)
- 106 Air calibration - 6in (150 mm)
- 108 Air calibration - 8in (200 mm)
- 110 Air calibration - 10in (250 mm)
- 112 Air calibration - 12in (300 mm)
- 114 Air calibration - 14in (350 mm)
- 116 Air calibration - 16in (400 mm)

**S: Preamplifier**

- 00 No preamplifier
- 02 2X gain preamplifier
- 10 10X gain preamplifier
- 20 20X gain preamplifier
- 40 40X gain preamplifier

**T: Hazardous area certification**

- 1 US/Canada Certificate
- 2 ATEX Certificate
- 3 IECEx Certificate

**U: Software**

- 0 Standard
- 1 Percent methane in carbon dioxide (biogas) software

**Z: Specials**

- 0 None
- S Special

Panametrics, a Baker Hughes business, provides solutions in the toughest applications and environments for moisture, oxygen, liquid and gas flow measurement.

Experts in flare management, Panametrics technology also reduces flare emissions and optimizes performance.

With a reach that extends across the globe, Panametrics' critical measurement solutions and flare emissions management are enabling customers to drive efficiency and achieve carbon reduction targets across critical industries including: Oil & Gas; Energy; Healthcare; Water and Wastewater; Chemical Processing; Food & Beverage and many others.

Join the conversation and follow us on LinkedIn
**linkedin.com/company/panametricscompany**

Baker Hughes™



BHCS38903 (08/2021)

**panametrics.com**